CTA Type Hand-Pull Manual Lubricators

CTA-8 Left Type CTA-8 Right Type

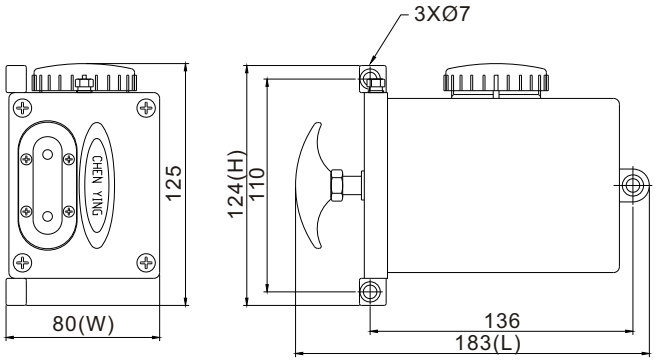

CTA-8 Right Type Standards Externals

CTA-3

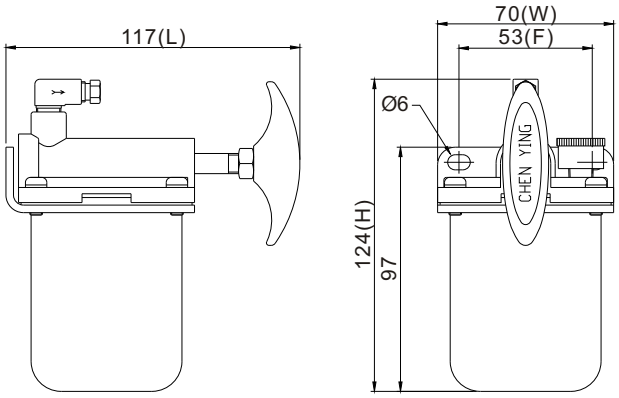

CTA-3 Type Standards Externals

◆Features

1.CTA type is divided by the volume of container CTA-3(180cc) and CTA-8(650cc).

2.The oil outlet of CTA-8 can be left-pull type or right-pull type upon request, Ø4 or Ø6 discharge bore are available as optional.

3.Low cost, high practicality. It can be used in diverse machinery.

4.Easy to be operated by pulling up the tee-handle for oil feeding repeatedly.

5.Small volume and easy for installation.

6.The unit is equipped with reverse stopper that prevents the back-flow of oil.

◆Application of Machines Equipment

1.This unit can work with the machines that do not need to feed oil at certain time.

2.It usually works with laser cutting machines or milling machines.

Model	Max Volume	Max Pressure	Capacity	Discharge Bore	Fixed Hole Distance(mm)	Length (mm)	Width (mm)	Height (mm)	Oil Viscosity	Weight (kg)
CTA-3	3cc	$3.5kgf/cm^2$	180cc	Ø4,Ø6	56	117	70	124	32-68cSt@40℃	0.49
CTA-8 Left Type CTA-8 Right Type	8cc		650cc	Ø4	136,110	183	80	125		1.01

◆Order code：

CTA- 8	R	U	0	※
Discharge Volume 8：8cc	L：Left Type R：Right Type	Outlet Direction U：Up D：Down	Discharge Bore 0：Ø4 1：Ø6	Special Request